REV.	DESCRIPTION	DATE
A	NEW DRAWING	4/20/2006

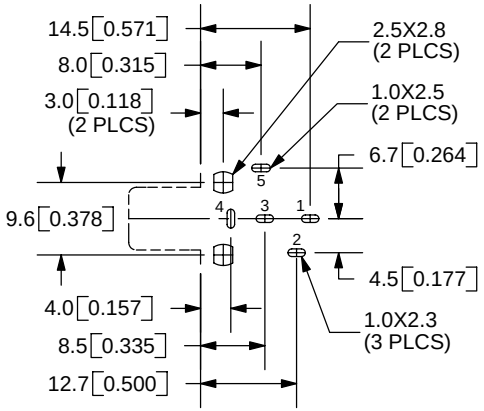

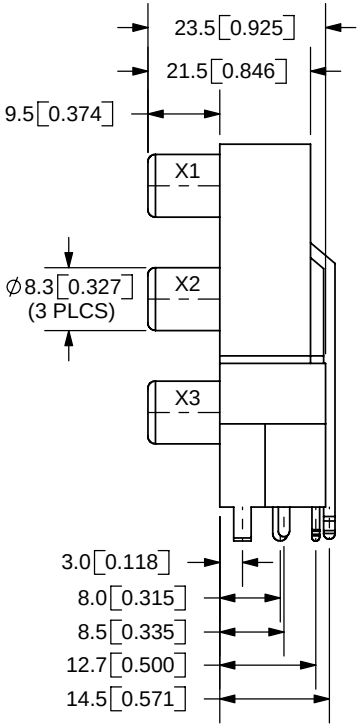

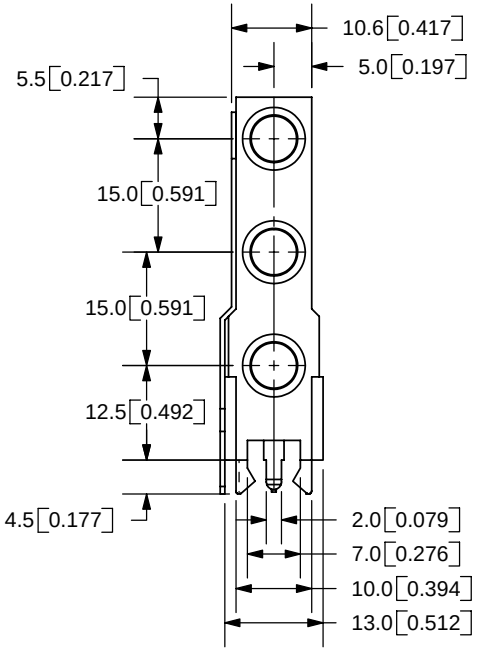

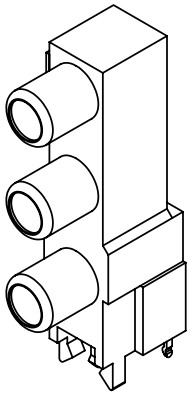

SPECIFICATIONS:
CONTACT RESISTANCE: 30m OHMS MAX
INSULATION RESISTANCE: 100M OHMS MIN: 500V DC
VOLTAGE WITHSTAND: 500V AC R.M.S. FOR 1 MINUTE
LIFE: 5,000 CYCLES

TOLERANCE:
±0.3mm UNLESS OTHERWISE SPECIFIED

RoHS

COLOR INDEX			
PART NO.	INPUT X1	INPUT X2	INPUT X3
RCJ-33234	Red Color	White Color	Yellow Color
RCJ-33X1 X2 X3	Color X1	Color X2	Color X3

MODEL NO.	RCJ-33XXX
SCHEMATIC	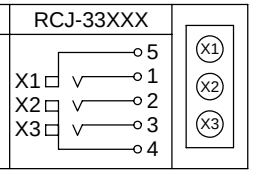

COLOR CHART	
1	Black
2	Red
3	White
4	Yellow
5	Blue
6	Green
7	Orange

	MATERIAL	PLATING
BARRELS	Brass	Nickel
TERMINAL 1	Brass	Silver
TERMINAL 2	Brass	Silver
TERMINAL 3	Brass	Silver
HOUSING 1	ABS	Black Color
HOUSING 2	ABS	Black Color
INPUT X1	PBT	see color index
INPUT X2	PBT	see color index
INPUT X3	PBT	see color index

CUI INC
9615 SW Allen Blvd., Ste. 103
Beaverton, OR 97005
Phone: 503-643-4899
800-275-4899
Fax: 503-372-1266
Website: www.cui.com

TITLE: RCA Jack, Dual, Rt Angle, PCB Mount, Vert.		REV: A
PART NO. RCJ-33XXX		UNITS: MM [INCHES]
DRAWN BY: ZRJ	APPROVED BY:	SCALE: 1:1

PC FILE NAME: RCJ-33XXX

COPYRIGHT 2006 BY CUI INC.